MASTER-BILT® Refrigeration Solutions

ITEM NO. _____
PROJECT _____
LOCATION _____
DATE _____ QTY. _____

TMG-74

TMG SERIES

Top Mounted Medium Temp Glass Door Merchandisers

MODELS

- ❑ TMG-27
- ❑ TMG-48
- ❑ TMG-52
- ❑ TMG-74
- ❑ TMG-80

FEATURES

CONSTRUCTION

- 24 gauge painted steel interior and exterior
- Cord and plug standard on all self-contained models
- Replaceable magnetic vinyl door gaskets
- 6"-7" adjustable metal legs
- Five white epoxy-coated, heavy-duty welded wire shelves per door (four cantilever and one bottom)
- Cantilever shelves are two-position and adjustable in 1" increments
- Equipped with high output 800 milliamp lamps and ballasts
- Independent on/off light switch
- 2" foamed-in-place "zero ODP" urethane insulation

FINISH

- Sparkling white polyester enamel interior and exterior

DOORS

- Door size:
  TMG-27 ..... 30" x 63"
  TMG-48/74..... 25 1/8" x 63"
  TMG-52/80.....27 1/8" x 63"
- Extra large, auto-close, double pane, safety glass doors
- Black door rails and handles
- Adjustable torsion bar hinges
- 90° hold-open feature
- Anthony® Torque Master® door hinges easily adjustable for closing tension and leveling

REFRIGERATION

- Refrigerant: R-134a
- Self-contained, factory tested, top mounted refrigeration system
- Top mounted low profile interior fan housing
- Electric condensate evaporator
- Temperature range: 34° to 41°F (1° to 5°C)
- R-factor (insulation efficiency rating): 17.24

WARRANTY

- Standard limited four year extended compressor and one year limited parts and labor

OPTIONS

- ❑ Add suffix "R" for remote system (available on TMG-48 and TMG-74 only)
- ❑ Add suffix "QC" for quick couple system
- ❑ Price tag molding
- ❑ Custom exterior colors
- ❑ Baskets
- ❑ Additional shelves
- ❑ Casters

MASTER-BILT® Refrigeration Solutions
908 Highway 15 North • New Albany, MS 38652
PHONE: 800-647-1284 or 662-534-9061 • FAX: 800-232-3966 or 662-534-6049 • www.master-bilt.com

TMG SERIES
TOP MOUNTED MEDIUM TEMP GLASS DOOR MERCHANDISERS

TECHNICAL SPECIFICATIONS

MODEL	DIMENSIONS (in.) L	D	H*	DIMENSIONS (mm) L	D	H	VOLTS	AMPS	UNIT H.P.	NO. OF DOORS	CAP. CU. FT.	SHIP CU. FT.	SHIP WT. LB/KG
TMG-27	31	35 3/4	82 1/4	787	908	2089	115	8.0	1/3	1	27.5	79.0	490/223
TMG-48	52	35 3/4	82 1/4	1321	908	2089	115	8.0	1/2	2	49.0	117.0	685/311
TMG-52	56	35 3/4	82 1/4	1422	908	2089	115	8.0	1/2	2	53.0	128.0	700/318
TMG-74	78	35 3/4	82 1/4	1981	908	2089	115	12.0	3/4	3	75.5	168.7	930/423
TMG-80	84	35 3/4	82 1/4	2134	908	2089	115	12.0	3/4	3	81.6	185.0	960/436

*Height includes 6"-7" adjustable legs.

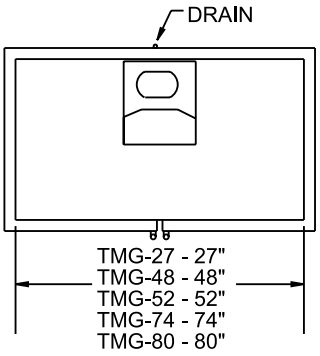

PLAN VIEW

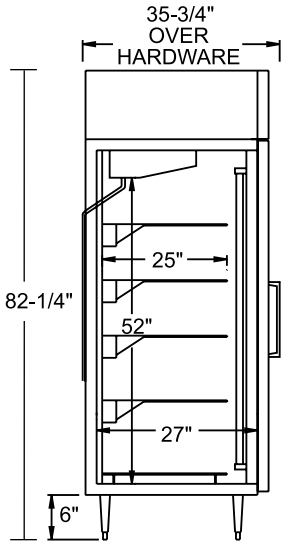

SIDE VIEW

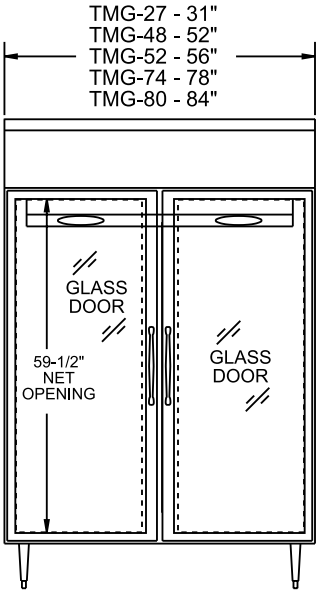

ELEVATION VIEW

LISTINGS

c UL us NSF

HOOKUP

Via plug in, 9 foot long flexible three wire 14/3 cord with molded plug.

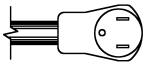

NEMA 5-15P (TMG-27, -48 and -52)

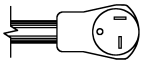

NEMA 5-20P (TMG-74 and -80)

BID SPECIFICATIONS

Item no. TMG-_____
Provide_____( ) Top Mounted Medium Temperature Glass Door Merchandiser(s), Master-Bilt model no. TMG-_____.

Merchandiser to be provided with adjustable torsion bar hinges, top mounted low profile interior fan housing, electric condensate evaporator, metal legs with 6"-7" adjustable range, 800 milliamp bulbs, independent on/off light switch and black door rails and handles. Merchandiser to also have five white epoxy-coated shelves (four cantilever and one bottom) per door.

The refrigeration system is to be top mounted, self-contained and use R-134a refrigerant. The temperature range will be 34° to 41°F (1° to 5°C).

Merchandiser to have standard limited four year extended compressor warranty and one year limited parts and labor warranty. Merchandiser to be UL, C-UL and NSF listed.

NOTE: Cabinet designed for optimum performance in air-conditioned area at 75°F ambient and 55% relative humidity. All specifications subject to change without notice.

MASTER-BILT® Refrigeration Solutions
908 Highway 15 North • New Albany, MS 38652
PHONE: 800-647-1284 or 662-534-9061 • FAX: 800-232-3966 or 662-534-6049 • www.master-bilt.com
Standex Food Service

245-5/05-web
©Master-Bilt Products division of Standex International, Inc. All rights reserved. Printed in U.S.A.